AC/DC METAL FACE INDUCTIVE PROXIMITY SENSORS

Diameter	M12			M12		
● Shielded ○ Non-shielded	●		○	●		○
Switching Distance Sn: mm	2 mm		4 mm	2 mm		4 mm
Housing Material	Stainless steel			Stainless steel		
● With LED ○ Without LED	●			●		
Picture						
Operating Voltage	20-250 VAC, 50-60 Hz; 20-250 VDC			20-250 VAC, 50-60 Hz; 20-250 VDC		
No Load Current	<2.5mA			<2.5mA		
Max. Load Current	100mA			100mA		
Leakage Current	<2.5mA			<2.5mA		
Surge Current	2.2A for 20ms			2.2A for 20ms		
Min. Load Current	5mA			5mA		
Voltage Drop	<=10 VAC :<=8 VDC			<=10 VAC :<=8 VDC		
Switching Frequency	25HZ AC; 40 Hz DC			25HZ AC; 40 Hz DC		
Response Time	10ms/10ms			10ms/10ms		
Switching Hysteresis	<15%(Sr)			<15%(Sr)		
Repeat Accuracy	<1.0% (Sr)			<1.0% (Sr)		
Protection Category	IP67			IP67		
Operating Temperature	-25℃~+70℃			-25℃~+70℃		
Temperature Drift	<10% (Sr)			<10% (Sr)		
Short Circuit Protection	NO			NO		
Material Active Face	Stainless steel			Stainless steel		
DC 3 wire 10-30V NPN N.O.						
DC 3 wire 10-30V NPN N.C.						
DC 3 wire 10-30V PNP N.O.						
DC 3 wire 10-30V PNP N.C.						
DC 4 wire 10-30V Changeover PNP (N.O. & N.C.)						
DC 4 wire 10-30V Changeover NPN (N.O. & N.C.)						
DC 2 wire 10-60V N.O.						
DC 2 wire 10-60V N.C.						
DC 3 wire 10-55V NPN N.O.						
DC 3 wire 10-55V NPN N.C.						
DC 3 wire 10-55V PNP N.O.						
DC 3 wire 10-55V PNP N.C.						
AC 2 wire 20-250V N.O.						
AC 2 wire 20-250V N.C.						
AC 2 wire 20-250V N.O. or N.C. Changeable						
AC/DC 2 wire 20-250V N.O.	**P8C1F1202UO3B2**	**15**	**P8C2F1204UO3B2**	**P8C1F1202UOMB3**	**53**	**P8C2F1204UOMB3**
AC/DC 2 wire 20-250V N.C.	**P8C1F1202UC3B2**	**16**	**P8C2F1204UC3B2**	**P8C1F1202UCMB3**	**53**	**P8C2F1204UCMB3**
AC/DC 2 wire 20-250V N.O. or N.C. Changeable						
Dimensions (unit: mm)	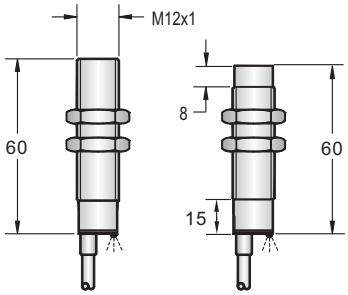			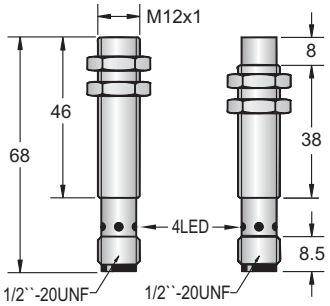		
Cable 2M (PVC)	4∅3x0.34					
Weight	approx.77g		approx.76g	approx.30g		approx.29g