AC METAL FACE INDUCTIVE PROXIMITY SENSORS

Diameter	M30			M30		
● Shielded ○ Non-shielded	●		○	●		○
Switching Distance Sn: mm	10 mm		15mm	10 mm		15 mm
Housing Material	Stainless steel			Stainless steel		
● With LED ○ Without LED	●			●		
Picture	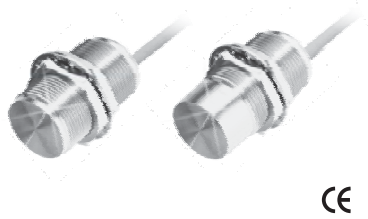					
Operating Voltage	20-250VAC			20-250VAC		
No Load Current	<1.8mA			<1.8mA		
Max. Load Current	400mA			400mA		
Leakage Current	<1.8mA			<1.8mA		
Surge Current	5A(20ms)			5A(20ms)		
Min. Load Current	5mA			5mA		
Voltage Drop	<8VAC at 400MA			<8VAC at 400MA		
Switching Frequency	<25HZ			<25HZ		
Response Time	10ms/10ms			10ms/10ms		
Switching Hysteresis	<15%(Sr)			<15%(Sr)		
Repeat Accuracy	<1.0%(Sr)			<1.0%(Sr)		
Protection Category	IP67			IP67		
Operating Temperature	-25 °C - +70 °C			-25 °C - +70 °C		
Temperature Drift	<10%(Sr)			<10%(Sr)		
Short Circuit Protection	NO			NO		
Material Active Face	Stainless steel			Stainless steel		
DC 3 wire 10-30V NPN N.O.						
DC 3 wire 10-30V NPN N.C.						
DC 3 wire 10-30V PNP N.O.						
DC 3 wire 10-30V PNP N.C.						
DC 4 wire 10-30V Changeover PNP (N.O. & N.C.)						
DC 4 wire 10-30V Changeover NPN (N.O. & N.C.)						
DC 2 wire 10-60V N.O.						
DC 2 wire 10-60V N.C.						
DC 3 wire 10-55V NPN N.O.						
DC 3 wire 10-55V NPN N.C.						
DC 3 wire 10-55V PNP N.O.						
DC 3 wire 10-55V PNP N.C.						
AC 2 wire 20-250V N.O.	**P7C1F3010AO3B2**	**11**	**P7C2F3015AO3B2**	**P7C1F3010AOMB3**	**51**	**P7C2F3015AOMB3**
AC 2 wire 20-250V N.C.	**P7C1F3010AC3B2**	**12**	**P7C2F3015AC3B2**	**P7C1F3010ACMB3**	**51**	**P7C2F3015ACMB3**
AC 2 wire 20-250V N.O. or N.C. Changeable						
AC/DC 2 wire 20-250V N.O.						
AC/DC 2 wire 20-250V N.C.						
AC/DC 2 wire 20-250V N.O. or N.C. Changeable						
Dimensions (unit: mm)	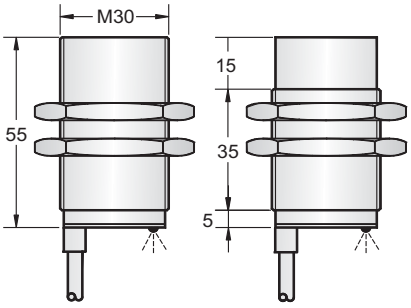			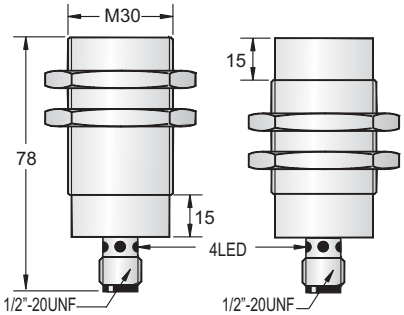		
Cable 2M (PVC)	5.8 ϕ3x0.5					
Weight	approx.247g		approx.237g	approx.147g		approx.137g

AC METAL FACE INDUCTIVE PROXIMITY SENSORS

M30	
●	○
10 mm	15 mm
Stainless steel	
●	

20-250VAC
<1.8mA
400mA
<1.8mA
5A(20ms)
5mA
<8VAC at 400MA
<25HZ
10ms/10ms
<15%(Sr)
<1.0%(Sr)
IP67
-25 °C - +70 °C
<10%(Sr)
NO
Stainless steel

P7C1F3010AOZB3	**55**	**P7C2F3015AOZB3**
P7C1F3010ACZB3	**55**	**P7C2F3015ACZB3**

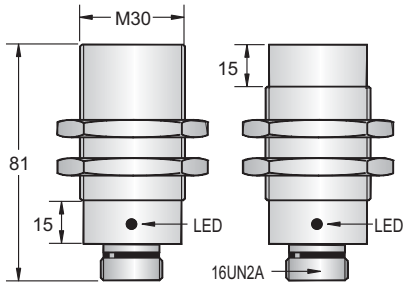

Approx.127g	Approx.125g