DC INDUCTIVE PROXIMITY SENSORS

ϕ 6.5		M8		M8	
●	○	●	○	●	○
3mm	6mm	1mm	2mm	1mm	2mm
Nickel plated brass		Stainless steel		Stainless steel	
●		●		●	

10-30VDC		10-30VDC / 5-36VDC /10-55V/ 10-60VDC		10-30VDC / 5-36VDC	
<10%		<10%		<10%	
<10mA		<10mA		<10mA	
200mA		200mA		200mA	
<0.01mA		<0.01mA		<0.01mA	
<2.0V		<1.5V		<1.5V	
1KHZ	500HZ	2KHZ		2KHZ	
0.2ms/0.2ms	0.5ms/0.5ms	0.1ms/0.1ms		0.1ms/0.1ms	
<15%(Sr)		<15%(Sr)		<15%(Sr)	
<1.0%(Sr)		<1.0%(Sr)		<1.0%(Sr)	
IP67		IP67		IP67	
-25 °C - +70 °C		-25 ℃ - +70 ℃		-25 ℃ - +70 ℃	
<10%(Sr)		<10%(Sr)		<10%(Sr)	
YES		YES		YES	
220mA		220mA		220mA	
POM		POM		POM	
P1D1S6.503NOES4	**31**	**P1D2S6.506NOES4**	**P1C1S0801NO3A2**	**1**	**P1C2S0802NO3A2**	**P1C1S0801NO3S2**	**1**	**P1C2S0802NO3S2**
P1D1S6.503NCES4	**32**	**P1D2S6.506NCES4**	**P1C1S0801NC3A2**	**2**	**P1C2S0802NC3A2**	**P1C1S0801NC3S2**	**2**	**P1C2S0802NC3S2**
P1D1S6.503POES4	**33**	**P1D2S6.506POES4**	**P1C1S0801PO3A2**	**3**	**P1C2S0802PO3A2**	**P1C1S0801PO3S2**	**3**	**P1C2S0802PO3S2**
P1D1S6.503PCES4	**34**	**P1D2S6.506PCES4**	**P1C1S0801PC3A2**	**4**	**P1C2S0802PC3A2**	**P1C1S0801PC3S2**	**4**	**P1C2S0802PC3S2**
			P1C1S0801PS4A2	**6**	**P1C2S0802PS4A2**			
			P1C1S0801NS4A2	**5**	**P1C2S0802NS4A2**			
			P4C1S0801CO2A2	**7**	**P4C2S0802CO2A2**			
			P4C1S0801CC2A2	**8**	**P4C2S0802CC2A2**			
			P3C1S0801NO3A2	**1**	**P3C2S0802NO3A2**			
			P3C1S0801NC3A2	**2**	**P3C2S0802NC3A2**			
			P3C1S0801PO3A2	**3**	**P3C2S0802PO3A2**			
			P3C1S0801PC3A2	**4**	**P3C2S0802PC3A2**			
			P2C1S0801NO3A2	**1**	**P2C2S0802NO3A2**	**P2C1S0801NO3S2**	**1**	**P2C2S0802NO3S2**
			P2C1S0801NC3A2	**2**	**P2C2S0802NC3A2**	**P2C1S0801NC3S2**	**2**	**P2C2S0802NC3S2**
			P2C1S0801PO3A2	**3**	**P2C2S0802PO3A2**	**P2C1S0801PO3S2**	**3**	**P2C2S0802PO3S2**
			P2C1S0801PC3A2	**4**	**P2C2S0802PC3A2**	**P2C1S0801PC3S2**	**4**	**P2C2S0802PC3S2**
			P2C1S0801PS4A2	**6**	**P2C2S0802PS4A2**			
			P2C1S0801NS4A2	**5**	**P2C2S0802NS4A2**			

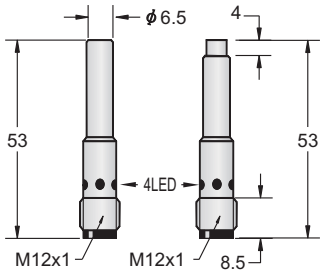

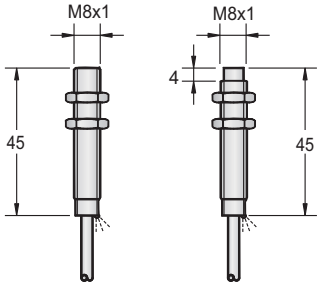

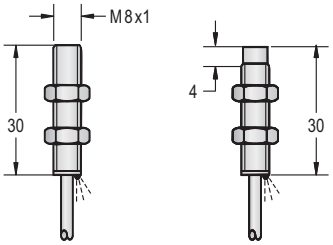

	3 ϕ 3x0.15 or 3 ϕ 4x0.15	3 ϕ 3x0.15
Approx.20 g	Approx.40 g	Approx.47 g

DC INDUCTIVE PROXIMITY SENSORS

Diameter	M8		M8	
● Shielded ○ Non-shielded	●	○	●	○
Switching Distance Sn: mm	1mm	2mm	1 mm	2 mm
Housing Material	Stainless steel		Stainless steel	
● With LED ○ Without LED	●		●	
Picture				
Operating Voltage	10-30VDC / 5-36VDC /10-55V/ 10-60VDC		10-30VDC / 5-36VDC	
Ripple	<10%		<10%	
No Load Current	<10mA		<10mA	
Max. Load Current	200mA		200mA	
Leakage Current	<0.01mA		<0.01mA	
Voltage Drop	<1.5V		<1.5V	
Switching Frequency	2KHZ		2KHZ	
Response Time	0.1ms/0.1ms		0.1ms/0.1ms	
Switching Hysteresis	<15%(Sr)		<15%(Sr)	
Repeat Accuracy	<1.0%(Sr)		<1.0%(Sr)	
Protection Category	IP67		IP67	
Operating Temperature	-25℃ - +70℃		-25℃ - +70℃	
Temperature Drift	<10%(Sr)		<10%(Sr)	
Short Circuit Protection	YES		YES	
Overload Trip Point	220mA		220mA	
Material Active Face	POM		POM	
DC 3 wire 10-30V NPN N.O.	P1C1S0801NOPA3	25	P1C2S0802NOPA3	P1C1S0801NOPS3 25 P1C2S0802NOPS3
DC 3 wire 10-30V NPN N.C.	P1C1S0801NCPA3	25	P1C2S0802NCPA3	P1C1S0801NCPS3 25 P1C2S0802NCPS3
DC 3 wire 10-30V PNP N.O.	P1C1S0801POPA3	26	P1C2S0802POPA3	P1C1S0801POPS3 26 P1C2S0802POPS3
DC 3 wire 10-30V PNP N.C.	P1C1S0801PCPA3	26	P1C2S0802PCPA3	P1C1S0801PCPS3 26 P1C2S0802PCPS3
DC 4 wire 10-30V Changeover PNP (N.O. & N.C.)	P1C1S0801PSPA4	28	P1C2S0802PSPA4	
DC 4 wire 10-30V Changeover NPN (N.O. & N.C.)	P1C1S0801NSPA4	27	P1C2S0802NSPA4	
DC 2 wire 10-60V N.O. *	P4C1S0801COPA3	29	P4C2S0802COPA3	
DC 2 wire 10-60V N.C. *	P4C1S0801CCPA3	30	P4C2S0802CCPA3	
DC 3 wire 10-55V NPN N.O.	P3C1S0801NOPA3	25	P3C2S0802NOPA3	
DC 3 wire 10-55V NPN N.C.	P3C1S0801NCPA3	25	P3C2S0802NCPA3	
DC 3 wire 10-55V PNP N.O.	P3C1S0801POPA3	26	P3C2S0802POPA3	
DC 3 wire 10-55V PNP N.C.	P3C1S0801PCPA3	26	P3C2S0802PCPA3	
DC 3 wire 5-36V NPN N.O.	P2C1S0801NOPA3	25	P2C2S0802NOPA3	P2C1S0801NOPS3 25 P2C2S0802NOPS3
DC 3 wire 5-36V NPN N.C.	P2C1S0801NCPA3	25	P2C2S0802NCPA3	P2C1S0801NCPS3 25 P2C2S0802NCPS3
DC 3 wire 5-36V PNP N.O.	P2C1S0801POPA3	26	P2C2S0802POPA3	P2C1S0801POPS3 26 P2C2S0802POPS3
DC 3 wire 5-36V PNP N.C.	P2C1S0801PCPA3	26	P2C2S0802PCPA3	P2C1S0801PCPS3 26 P2C2S0802PCPS3
DC 4 wire 5-36V Changeover PNP (N.O & N.C.)	P2C1S0801PSPA4	28	P2C2S0802PSPA4	
DC 4 wire 5-36V Changeover NPN (N.O & N.C.)	P2C1S0801NSPA4	27	P2C2S0802NSPA4	
Dimensions (unit: mm) * : DC 2wire 10-60V specifications see page 3-05. Other is same.	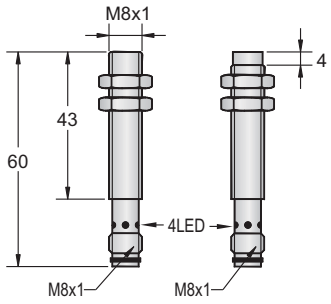		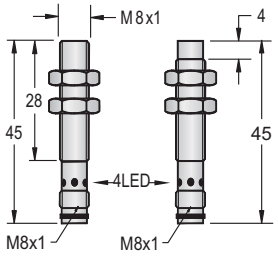	
Cable 2M (PVC)				
Weight	Approx.15 g		Approx.12 g	

DC INDUCTIVE PROXIMITY SENSORS

M8	
●	○
1mm	2mm
Stainless steel or Nickel plated brass	
●	

10-30VDC / 5-36VDC /10-55V/ 10-60VDC		
<10%		
<10mA		
200mA		
<0.01mA		
<1.5V		
2KHZ		
0.1ms/0.1ms		
<15%(Sr)		
<1.0%(Sr)		
IP67		
-25℃ - +70℃		
<10%(Sr)		
YES		
220mA		
POM		
P1C1S0801NOEA4	31	P1C2S0802NOEA4
P1C1S0801NCEA4	32	P1C2S0802NCEA4
P1C1S0801POEA4	33	P1C2S0802POEA4
P1C1S0801PCEA4	34	P1C2S0802PCEA4
P1C1S0801PSEA4	36	P1C2S0802PSEA4
P1C1S0801NSEA4	35	P1C2S0802NSEA4
P4C1S0801COEA4	37	P4C2S0802COEA4
P4C1S0801CCEA4	38	P4C2S0802CCEA4
P3C1S0801NOEA4	31	P3C2S0802NOEA4
P3C1S0801NCEA4	32	P3C2S0802NCEA4
P3C1S0801POEA4	33	P3C2S0802POEA4
P3C1S0801PCEA4	34	P3C2S0802PCEA4
P2C1S0801NOEA4	31	P2C2S0802NOEA4
P2C1S0801NCEA4	32	P2C2S0802NCEA4
P2C1S0801POEA4	33	P2C2S0802POEA4
P2C1S0801PCEA4	34	P2C2S0802PCEA4
P2C1S0801PSEA4	36	P2C2S0802PSEA4
P2C1S0801NSEA4	35	P2C2S0802NSEA4

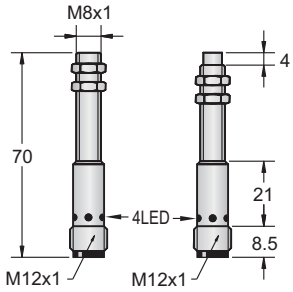

Approx.22 g

M8	
●	○
1 mm	2 mm
Stainless steel or Nickel plated brass	
●	

10-30VDC / 5-36VDC		
<10%		
<10mA		
200mA		
<0.01mA		
<1.5V		
2KHZ		
0.1ms/0.1ms		
<15%(Sr)		
<1.0%(Sr)		
IP67		
-25℃ - +70℃		
<10%(Sr)		
YES		
220mA		
POM		
P1C1B0801NOES4	31	P1C2B0802NOES4
P1C1B0801NCES4	32	P1C2B0802NCES4
P1C1B0801POES4	33	P1C2B0802POES4
P1C1B0801PCES4	34	P1C2B0802PCES4
P2C1B0801NOES4	31	P2C2B0802NOES4
P2C1B0801NCES4	32	P2C2B0802NCES4
P2C1B0801POES4	33	P2C2B0802POES4
P2C1B0801PCES4	34	P2C2B0802PCES4

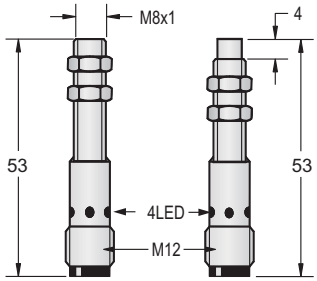

Approx.17 g

M8	
●	○
2mm	4mm
Stainless steel or Nickel plated brass	
●	

10-30VDC		
<10%		
<10mA		
200mA		
<0.01mA		
<2.0V		
2KHZ	1KHZ	
0.1ms/0.1ms	0.2ms/0.2ms	
<15%(Sr)		
<1.0%(Sr)		
IP67		
-25℃ - +70℃		
<10%(Sr)		
YES		
220mA		
POM		
P1C1S0802NO3A2	1	P1C2S0804NO3A2
P1C1S0802NC3A2	2	P1C2S0804NC3A2
P1C1S0802PO3A2	3	P1C2S0804PO3A2
P1C1S0802PC3A2	4	P1C2S0804PC3A2

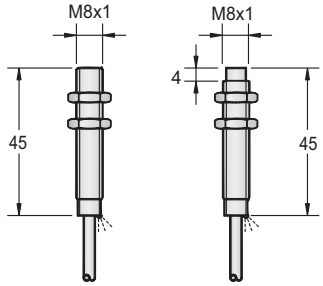

3 ϕ 3x0.15 or 3 ϕ 4x0.15
Approx.40 g

DC INDUCTIVE PROXIMITY SENSORS

Diameter	M8		M8	
● Shielded ○ Non-shielded	●	○	●	○
Switching Distance Sn: mm	2mm	4mm	2mm	4mm
Housing Material	Stainless steel or Nickel plated brass		Stainless steel	
● With LED ○ Without LED	●		●	
Picture				
Operating Voltage	10-30VDC		10-30VDC	
Ripple	<10%		<10%	
No Load Current	<10mA		<10mA	
Max. Load Current	200mA		200mA	
Leakage Current	<0.01mA		<0.01mA	
Voltage Drop	<2.0V		<2.0V	
Switching Frequency	2KHZ	1KHZ	2KHZ	1KHZ
Response Time	0.1ms/0.1ms	0.2ms/0.2ms	0.1ms/0.1ms	0.2ms/0.2ms
Switching Hysteresis	<15%(Sr)		<15%(Sr)	
Repeat Accuracy	<1.0%(Sr)		<1.0%(Sr)	
Protection Category	IP67		IP67	
Operating Temperature	-25℃ - +70℃		-25℃ - +70℃	
Temperature Drift	<10%(Sr)		<10%(Sr)	
Short Circuit Protection	YES		YES	
Overload Trip Point	220mA		220mA	
Material Active Face	POM		POM	
DC 3 wire 10-30V NPN N.O.	**P1C1S0802NO3S2**	**1**	**P1C2S0804NO3S2**	**P1C1S0802NOPA3**	**25**	**P1C2S0804NOPA3**
DC 3 wire 10-30V NPN N.C.	**P1C1S0802NC3S2**	**2**	**P1C2S0804NC3S2**	**P1C1S0802NCPA3**	**25**	**P1C2S0804NCPA3**
DC 3 wire 10-30V PNP N.O.	**P1C1S0802PO3S2**	**3**	**P1C2S0804PO3S2**	**P1C1S0802POPA3**	**26**	**P1C2S0804POPA3**
DC 3 wire 10-30V PNP N.C.	**P1C1S0802PC3S2**	**4**	**P1C2S0804PC3S2**	**P1C1S0802PCPA3**	**26**	**P1C2S0804PCPA3**
DC 4 wire 10-30V Changeover PNP (N.O. & N.C.)						
DC 4 wire 10-30V Changeover NPN (N.O. & N.C.)						
DC 2 wire 10-60V N.O.						
DC 2 wire 10-60V N.C.						
DC 3 wire 10-55V NPN N.O.						
DC 3 wire 10-55V NPN N.C.						
DC 3 wire 10-55V PNP N.O.						
DC 3 wire 10-55V PNP N.C.						
DC 3 wire 5-36V NPN N.O.						
DC 3 wire 5-36V NPN N.C.						
DC 3 wire 5-36V PNP N.O.						
DC 3 wire 5-36V PNP N.C.						
DC 4 wire 5-36V Changeover PNP (N.O & N.C.)						
DC 4 wire 5-36V Changeover NPN (N.O & N.C.)						
Dimensions (unit: mm)	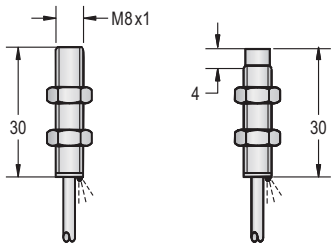		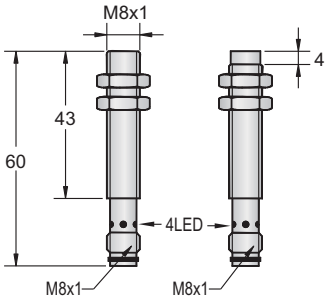	
Cable 2M (PVC)	3 ϕ 3x0.15			
Weight	Approx.47 g		Approx.15 g	

DC INDUCTIVE PROXIMITY SENSORS

M8	
●	○
2mm	4mm
Stainless steel	
●	

10-30VDC	
<10%	
<10mA	
200mA	
<0.01mA	
<2.0V	
2KHZ	1KHZ
0.1ms/0.1ms	0.2ms/0.2ms
<15%(Sr)	
<1.0%(Sr)	
IP67	
-25℃ - +70℃	
<10%(Sr)	
YES	
220mA	
POM	

P1C1S0802NOPS3	**25**	**P1C2S0804NOPS3**
P1C1S0802NCPS3	**25**	**P1C2S0804NCPS3**
P1C1S0802POPS3	**26**	**P1C2S0804POPS3**
P1C1S0802PCPS3	**26**	**P1C2S0804PCPS3**

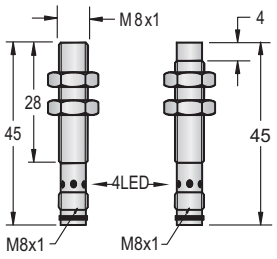

Approx.12 g

M8	
●	○
2mm	4mm
Stainless steel or Nickel plated brass	
●	

10-30VDC	
<10%	
<10mA	
200mA	
<0.01mA	
<2.0V	
2KHZ	1KHZ
0.1ms/0.1ms	0.2ms/0.2ms
<15%(Sr)	
<1.0%(Sr)	
IP67	
-25℃ - +70℃	
<10%(Sr)	
YES	
220mA	
POM	

P1C1B0802NOEA4	**31**	**P1C2B0804NOEA4**
P1C1B0802NCEA4	**32**	**P1C2B0804NCEA4**
P1C1B0802POEA4	**33**	**P1C2B0804POEA4**
P1C1B0802PCEA4	**34**	**P1C2B0804PCEA4**

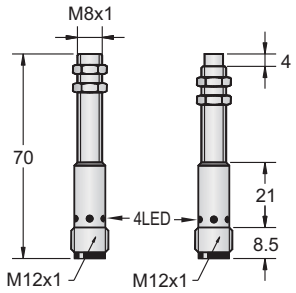

Approx.22 g

M8	
●	○
2 mm	4 mm
Stainless steel or Nickel plated brass	
●	

10-30VDC	
<10%	
<10mA	
200mA	
<0.01mA	
<2.0V	
2KHZ	1KHZ
0.1ms/0.1ms	0.2ms/0.2ms
<15%(Sr)	
<1.0%(Sr)	
IP67	
-25℃ - +70℃	
<10%(Sr)	
YES	
220mA	
POM	

P1C1B0802NOES4	**31**	**P1C2B0804NOES4**
P1C1B0802NCES4	**32**	**P1C2B0804NCES4**
P1C1B0802POES4	**33**	**P1C2B0804POES4**
P1C1B0802PCES4	**34**	**P1C2B0804PCES4**

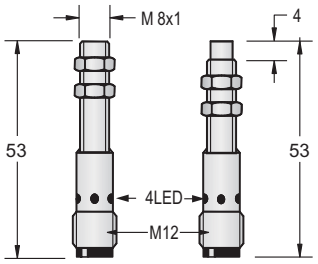

Approx.17 g

DC INDUCTIVE PROXIMITY SENSORS

Diameter	M8		M8	
● Shielded ○ Non-shielded	●	○	●	○
Switching Distance Sn: mm	3mm	6mm	3mm	6mm
Housing Material	Stainless steel or Nickel plated brass		Stainless steel or Nickel plated brass	
● With LED ○ Without LED	●		●	
Picture				
Operating Voltage	10-30VDC		10-30VDC	
Ripple	<10%		<10%	
No Load Current	<10mA		<10mA	
Max. Load Current	200mA		200mA	
Leakage Current	<0.01mA		<0.01mA	
Voltage Drop	<2.0V		<2.0V	
Switching Frequency	1KHZ	500HZ	1KHZ	500HZ
Response Time	0.2ms/0.2ms	0.5ms/0.5ms	0.2ms/0.2ms	0.5ms/0.5ms
Switching Hysteresis	<15%(Sr)		<15%(Sr)	
Repeat Accuracy	<1.0%(Sr)		<1.0%(Sr)	
Protection Category	IP67		IP67	
Operating Temperature	-25℃ - +70℃		-25℃ - +70℃	
Temperature Drift	<10%(Sr)		<10%(Sr)	
Short Circuit Protection	YES		YES	
Overload Trip Point	220mA		220mA	
Material Active Face	POM		POM	
DC 3 wire 10-30V NPN N.O.	**P1C1S0803NO3A2**	**1**	**P1C2S0806NO3A2**	**P1C1S0803NO3S2**	**1**	**P1C2S0806NO3S2**
DC 3 wire 10-30V NPN N.C.	**P1C1S0803NC3A2**	**2**	**P1C2S0806NC3A2**	**P1C1S0803NC3S2**	**2**	**P1C2S0806NC3S2**
DC 3 wire 10-30V PNP N.O.	**P1C1S0803PO3A2**	**3**	**P1C2S0806PO3A2**	**P1C1S0803PO3S2**	**3**	**P1C2S0806PO3S2**
DC 3 wire 10-30V PNP N.C.	**P1C1S0803PC3A2**	**4**	**P1C2S0806PC3A2**	**P1C1S0803PC3S2**	**4**	**P1C2S0806PC3S2**
DC 4 wire 10-30V Changeover PNP (N.O. & N.C.)						
DC 4 wire 10-30V Changeover NPN (N.O. & N.C.)						
DC 2 wire 10-60V N.O.						
DC 2 wire 10-60V N.C.						
DC 3 wire 10-55V NPN N.O.						
DC 3 wire 10-55V NPN N.C.						
DC 3 wire 10-55V PNP N.O.						
DC 3 wire 10-55V PNP N.C.						
DC 3 wire 5-36V NPN N.O.						
DC 3 wire 5-36V NPN N.C.						
DC 3 wire 5-36V PNP N.O.						
DC 3 wire 5-36V PNP N.C.						
DC 4 wire 5-36V Changeover PNP (N.O & N.C.)						
DC 4 wire 5-36V Changeover NPN (N.O & N.C.)						
Dimensions (unit: mm)	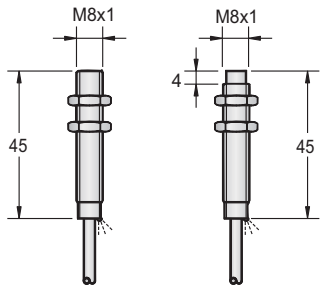		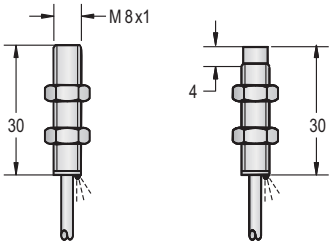	
Cable 2M (PVC)	3 ϕ 3x0.15		3 ϕ 3x0.15	
Weight	Approx.40 g		Approx.47 g	

DC INDUCTIVE PROXIMITY SENSORS

M8	
●	○
3mm	6mm
Stainless steel or Nickel plated brass	
●	

10-30VDC	
<10%	
<10mA	
200mA	
<0.01mA	
<2.0V	
1KHZ	500HZ
0.2ms/0.2ms	0.5ms/0.5ms
<15%(Sr)	
<1.0%(Sr)	
IP67	
-25℃ - +70℃	
<10%(Sr)	
YES	
220mA	
POM	

P1C1S0803NOPA3	**25**	**P1C2S0806NOPA3**
P1C1S0803NCPA3	**25**	**P1C2S0806NCPA3**
P1C1S0803POPA3	**26**	**P1C2S0806POPA3**
P1C1S0803PCPA3	**26**	**P1C2S0806PCPA3**

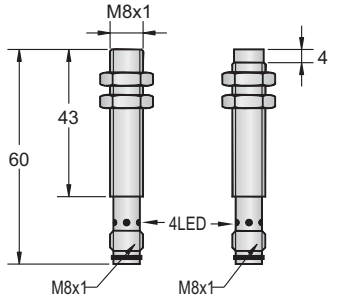

Approx.15 g

M8	
●	○
3mm	6mm
Stainless steel or Nickel plated brass	
●	

10-30VDC	
<10%	
<10mA	
200mA	
<0.01mA	
<2.0V	
1KHZ	500HZ
0.2ms/0.2ms	0.5ms/0.5ms
<15%(Sr)	
<1.0%(Sr)	
IP67	
-25℃ - +70℃	
<10%(Sr)	
YES	
220mA	
POM	

P1C1S0803NOPS3	**25**	**P1C2S0806NOPS3**
P1C1S0803NCPS3	**25**	**P1C2S0806NCPS3**
P1C1S0803POPS3	**26**	**P1C2S0806POPS3**
P1C1S0803PCPS3	**26**	**P1C2S0806PCPS3**

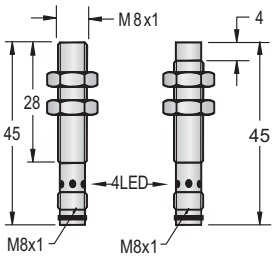

Approx.12 g

M8	
●	○
3mm	6mm
Stainless steel or Nickel plated brass	
●	

10-30VDC	
<10%	
<10mA	
200mA	
<0.01mA	
<2.0V	
1KHZ	500HZ
0.2ms/0.2ms	0.5ms/0.5ms
<15%(Sr)	
<1.0%(Sr)	
IP67	
-25℃ - +70℃	
<10%(Sr)	
YES	
220mA	
POM	

P1C1B0803NOEA4	**31**	**P1C2B0806NOEA4**
P1C1B0803NCEA4	**32**	**P1C2B0806NCEA4**
P1C1B0803POEA4	**33**	**P1C2B0806POEA4**
P1C1B0803PCEA4	**34**	**P1C2B0806PCEA4**

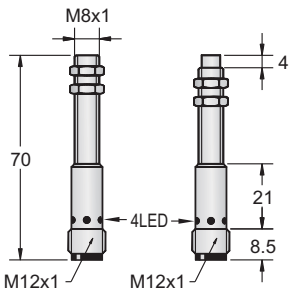

Approx.22 g

DC INDUCTIVE PROXIMITY SENSORS

Diameter	M8		Q8	
● Shielded ○ Non-shielded	●	○	●	
Switching Distance Sn: mm	3 mm	6 mm	1 mm	
Housing Material	Stainless steel or Nickel plated brass		Nickel plated brass	
● With LED ○ Without LED	●		●	
Picture				
Operating Voltage	10-30VDC		10-30VDC / 5-36VDC	
Ripple	<10%		<10%	
No Load Current	<10mA		<10mA	
Max. Load Current	200mA		200mA	
Leakage Current	<0.01mA		<0.01mA	
Voltage Drop	<2.0V		<1.5V	
Switching Frequency	1KHZ	500HZ	2KHZ	
Response Time	0.2ms/0.2ms	0.5ms/0.5ms	0.1ms/0.1ms	
Switching Hysteresis	<15%(Sr)		<15%(Sr)	
Repeat Accuracy	<1.0%(Sr)		<1.0%(Sr)	
Protection Category	IP67		IP67	
Operating Temperature	-25°C - +70°C		-25°C - +70°C	
Temperature Drift	<10%(Sr)		<10%(Sr)	
Short Circuit Protection	YES		YES	
Overload Trip Point	220mA		220mA	
Material Active Face	POM		POM	
DC 3 wire 10-30V NPN N.O.	**P1C1B0803NOES4**	**31**	**P1C2B0806NOES4**	**P1S1B8801NO3A2** **1**
DC 3 wire 10-30V NPN N.C.	**P1C1B0803NCES4**	**32**	**P1C2B0806NCES4**	**P1S1B8801NC3A2** **2**
DC 3 wire 10-30V PNP N.O.	**P1C1B0803POES4**	**33**	**P1C2B0806POES4**	**P1S1B8801PO3A2** **3**
DC 3 wire 10-30V PNP N.C.	**P1C1B0803PCES4**	**34**	**P1C2B0806PCES4**	**P1S1B8801PC3A2** **4**
DC 4 wire 10-30V Changeover PNP (N.O. & N.C.)				
DC 4 wire 10-30V Changeover NPN (N.O. & N.C.)				
DC 2 wire 10-60V N.O.				
DC 2 wire 10-60V N.C.				
DC 3 wire 10-55V NPN N.O.				
DC 3 wire 10-55V NPN N.C.				
DC 3 wire 10-55V PNP N.O.				
DC 3 wire 10-55V PNP N.C.				
DC 3 wire 5-36V NPN N.O.				**P2S1B8801NO3A2** **1**
DC 3 wire 5-36V NPN N.C.				**P2S1B8801NC3A2** **2**
DC 3 wire 5-36V PNP N.O.				**P2S1B8801PO3A2** **3**
DC 3 wire 5-36V PNP N.C.				**P2S1B8801PC3A2** **4**
DC 4 wire 5-36V Changeover PNP (N.O & N.C.)				
DC 4 wire 5-36V Changeover NPN (N.O & N.C.)				
Dimensions (unit: mm)	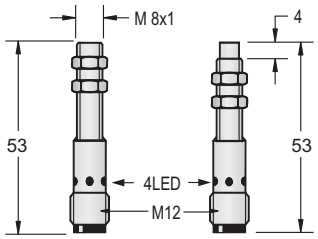		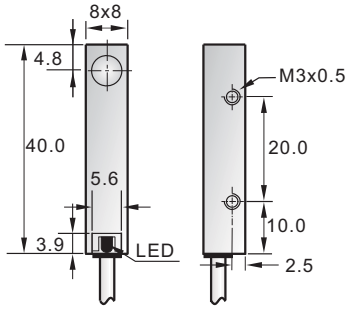	
Cable 2M (PVC)			3 ϕ 3x0.15	
Weight	Approx.17 g		Approx.38 g	