DC INDUCTIVE PROXIMITY SENSORS

Diameter	M8		Q8	
● Shielded ○ Non-shielded	●	○	●	
Switching Distance Sn: mm	3 mm	6 mm	1 mm	
Housing Material	Stainless steel or Nickel plated brass		Nickel plated brass	
● With LED ○ Without LED	●		●	
Picture				
Operating Voltage	10-30VDC		10-30VDC / 5-36VDC	
Ripple	<10%		<10%	
No Load Current	<10mA		<10mA	
Max. Load Current	200mA		200mA	
Leakage Current	<0.01mA		<0.01mA	
Voltage Drop	<2.0V		<1.5V	
Switching Frequency	1KHZ	500HZ	2KHZ	
Response Time	0.2ms/0.2ms	0.5ms/0.5ms	0.1ms/0.1ms	
Switching Hysteresis	<15%(Sr)		<15%(Sr)	
Repeat Accuracy	<1.0%(Sr)		<1.0%(Sr)	
Protection Category	IP67		IP67	
Operating Temperature	-25°C - +70°C		-25°C - +70°C	
Temperature Drift	<10%(Sr)		<10%(Sr)	
Short Circuit Protection	YES		YES	
Overload Trip Point	220mA		220mA	
Material Active Face	POM		POM	
DC 3 wire 10-30V NPN N.O.	**P1C1B0803NOES4**	**31**	**P1C2B0806NOES4**	**P1S1B8801NO3A2** **1**
DC 3 wire 10-30V NPN N.C.	**P1C1B0803NCES4**	**32**	**P1C2B0806NCES4**	**P1S1B8801NC3A2** **2**
DC 3 wire 10-30V PNP N.O.	**P1C1B0803POES4**	**33**	**P1C2B0806POES4**	**P1S1B8801PO3A2** **3**
DC 3 wire 10-30V PNP N.C.	**P1C1B0803PCES4**	**34**	**P1C2B0806PCES4**	**P1S1B8801PC3A2** **4**
DC 4 wire 10-30V Changeover PNP (N.O. & N.C.)				
DC 4 wire 10-30V Changeover NPN (N.O. & N.C.)				
DC 2 wire 10-60V N.O.				
DC 2 wire 10-60V N.C.				
DC 3 wire 10-55V NPN N.O.				
DC 3 wire 10-55V NPN N.C.				
DC 3 wire 10-55V PNP N.O.				
DC 3 wire 10-55V PNP N.C.				
DC 3 wire 5-36V NPN N.O.				**P2S1B8801NO3A2** **1**
DC 3 wire 5-36V NPN N.C.				**P2S1B8801NC3A2** **2**
DC 3 wire 5-36V PNP N.O.				**P2S1B8801PO3A2** **3**
DC 3 wire 5-36V PNP N.C.				**P2S1B8801PC3A2** **4**
DC 4 wire 5-36V Changeover PNP (N.O & N.C.)				
DC 4 wire 5-36V Changeover NPN (N.O & N.C.)				
Dimensions (unit: mm)	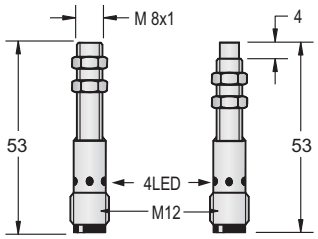		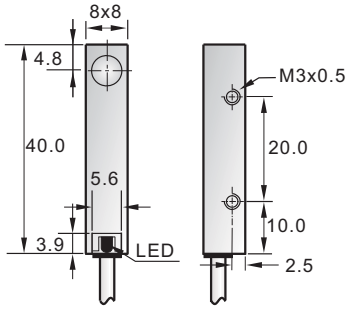	
Cable 2M (PVC)			3 ϕ 3x0.15	
Weight	Approx.17 g		Approx.38 g	

DC INDUCTIVE PROXIMITY SENSORS

Q8	Q8	Q8
●	●	●
1 mm	1 mm	1 mm
Nickel plated brass	Nickel plated brass	Nickel plated brass
●	●	●
10-30VDC \ 5-36VDC	10-30VDC / 5-36VDC	10-30VDC / 5-36VDC
<10%	<10%	<10%
<10mA	<10mA	<10mA
200mA	200mA	200mA
<0.01mA	<0.01mA	<0.01mA
<1.5V	<1.5V	<1.5V
2KHZ	2KHZ	2KHZ
0.1ms/0.1ms	0.1ms/0.1ms	0.1ms/0.1ms
<15%(Sr)	<15%(Sr)	<15%(Sr)
<1.0%(Sr)	<1.0%(Sr)	<1.0%(Sr)
IP67	IP67	IP67
-25°C - +70°C	-25°C - +70°C	-25°C - +70°C
<10%(Sr)	<10%(Sr)	<10%(Sr)
YES	YES	YES
220mA	220mA	220mA
POM	POM	POM

P1S1B8801NO3S2	**1**	**P1S1B8801NOPA3**	**25**	**P1S1B8801NO3A2M**	**1**
P1S1B8801NC3S2	**2**	**P1S1B8801NCPA3**	**25**	**P1S1B8801NC3A2M**	**2**
P1S1B8801PO3S2	**3**	**P1S1B8801POPA3**	**26**	**P1S1B8801PO3A2M**	**3**
P1S1B8801PC3S2	**4**	**P1S1B8801PCPA3**	**26**	**P1S1B8801PC3A2M**	**4**
P2S1B8801NO3S2	**1**	**P2S1B8801NOPA3**	**25**	**P2S1B8801NO3A2M**	**1**
P2S1B8801NC3S2	**2**	**P2S1B8801NCPA3**	**25**	**P2S1B8801NC3A2M**	**2**
P2S1B8801PO3S2	**3**	**P2S1B8801POPA3**	**26**	**P2S1B8801PO3A2M**	**3**
P2S1B8801PC3S2	**4**	**P2S1B8801PCPA3**	**26**	**P2S1B8801PC3A2M**	**4**

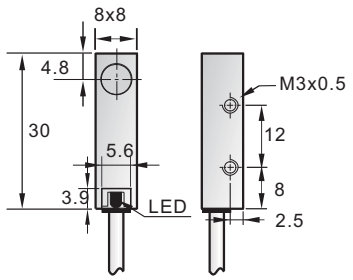

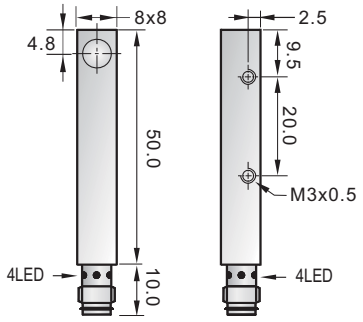

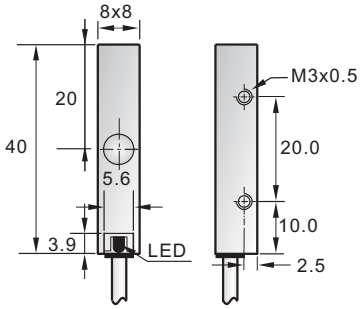

3 ϕ 3x0.15		3 ϕ 3x0.15
Approx.38 g	Approx.38 g	Approx.38 g

DC INDUCTIVE PROXIMITY SENSORS

Diameter	Q8		Q8	
● Shielded ○ Non-shielded	●		●	
Switching Distance Sn: mm	1 mm		1 mm	
Housing Material	Nickel plated brass		Nickel plated brass	
● With LED ○ Without LED	●		●	
Picture				
Operating Voltage	10-30VDC \ 5-36VDC		10-30VDC / 5-36VDC	
Ripple	<10%		<10%	
No Load Current	<10mA		<10mA	
Max. Load Current	200mA		200mA	
Leakage Current	<0.01mA		<0.01mA	
Voltage Drop	<1.5V		<1.5V	
Switching Frequency	2KHZ		2KHZ	
Response Time	0.1ms/0.1ms		0.1ms/0.1ms	
Switching Hysteresis	<15%(Sr)		<15%(Sr)	
Repeat Accuracy	<1.0%(Sr)		<1.0%(Sr)	
Protection Category	IP67		IP67	
Operating Temperature	-25°C - +70°C		-25°C - +70°C	
Temperature Drift	<10%(Sr)		<10%(Sr)	
Short Circuit Protection	YES		YES	
Overload Trip Point	220mA		220mA	
Material Active Face	POM		POM	
DC 3 wire 10-30V NPN N.O.	**P1S1B8801NO3S2M**	**1**	**P1S1B8801NOPA3M**	**25**
DC 3 wire 10-30V NPN N.C.	**P1S1B8801NC3S2M**	**2**	**P1S1B8801NCPA3M**	**25**
DC 3 wire 10-30V PNP N.O.	**P1S1B8801PO3S2M**	**3**	**P1S1B8801POPA3M**	**26**
DC 3 wire 10-30V PNP N.C.	**P1S1B8801PC3S2M**	**4**	**P1S1B8801PCPA3M**	**26**
DC 4 wire 10-30V Changeover PNP (N.O. & N.C.)				
DC 4 wire 10-30V Changeover NPN (N.O. & N.C.)				
DC 2 wire 10-60V N.O.				
DC 2 wire 10-60V N.C.				
DC 3 wire 10-55V NPN N.O.				
DC 3 wire 10-55V NPN N.C.				
DC 3 wire 10-55V PNP N.O.				
DC 3 wire 10-55V PNP N.C.				
DC 3 wire 5-36V NPN N.O.	**P2S1B8801NO3S2M**	**1**	**P2S1B8801NOPA3M**	**25**
DC 3 wire 5-36V NPN N.C.	**P2S1B8801NC3S2M**	**2**	**P2S1B8801NCPA3M**	**25**
DC 3 wire 5-36V PNP N.O.	**P2S1B8801PO3S2M**	**3**	**P2S1B8801POPA3M**	**26**
DC 3 wire 5-36V PNP N.C.	**P2S1B8801PC3S2M**	**4**	**P2S1B8801PCPA3M**	**26**
DC 4 wire 5-36V Changeover PNP (N.O & N.C.)				
DC 4 wire 5-36V Changeover NPN (N.O & N.C.)				
Dimensions (unit: mm)	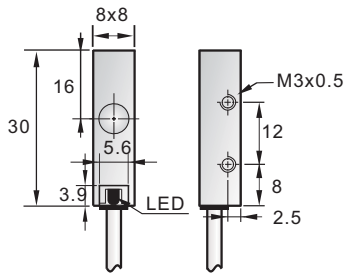		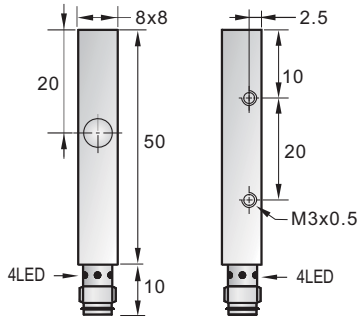	
Cable 2M (PVC)	3 ϕ 3x0.15			
Weight	Approx.38 g		Approx.38 g	

DC INDUCTIVE PROXIMITY SENSORS

Q8	Q8	Q8
●	●	●
2 mm	2 mm	2 mm
Nickel plated brass	Nickel plated brass	Nickel plated brass
●	●	●
10-30VDC	10-30VDC	10-30VDC
<10%	<10%	<10%
<10mA	<10mA	<10mA
200mA	200mA	200mA
<0.01mA	<0.01mA	<0.01mA
<2.0V	<20V	<2.0V
2KHZ	2KHZ	2KHZ
0.1ms/0.1ms	0.1ms/0.1ms	0.1ms/0.1ms
<15%(Sr)	<15%(Sr)	<15%(Sr)
<1.0%(Sr)	<1.0%(Sr)	<1.0%(Sr)
IP67	IP67	IP67
-25°C - +70°C	-25°C - +70°C	-25°C - +70°C
<10%(Sr)	<10%(Sr)	<10%(Sr)
YES	YES	YES
220mA	220mA	220mA
POM	POM	POM
P1S1B8802NO3A2 1	**P1S1B8802NO3S2** 1	**P1S1B8802NOPA3** 25
P1S1B8802NC3A2 2	**P1S1B8802NC3S2** 2	**P1S1B8802NCPA3** 25
P1S1B8802PO3A2 3	**P1S1B8802PO3S2** 3	**P1S1B8802POPA3** 26
P1S1B8802PC3A2 4	**P1S1B8802PC3S2** 4	**P1S1B8802PCPA3** 26
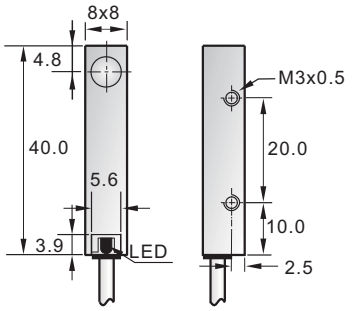	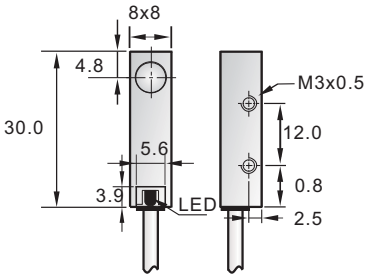	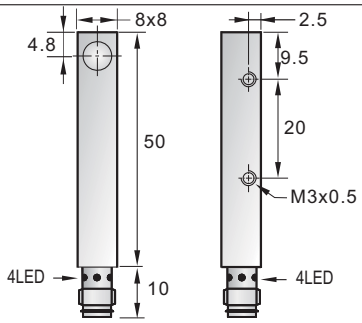
3 ϕ 3x0.15	3 ϕ 3x0.15	
Approx.38 g	Approx.38 g	Approx.38 g

DC INDUCTIVE PROXIMITY SENSORS

Diameter	Q8	Q8
● Shielded ○ Non-shielded	●	●
Switching Distance Sn: mm	2 mm	2 mm
Housing Material	Nickel plated brass	Nickel plated brass
● With LED ○ Without LED	●	●
Picture		
Operating Voltage	10-30VDC	10-30VDC
Ripple	<10%	<10%
No Load Current	<10mA	<10mA
Max. Load Current	200mA	200mA
Leakage Current	<0.01mA	<0.01mA
Voltage Drop	<2.0V	<2.0V
Switching Frequency	2KHZ	2KHZ
Response Time	0.1ms/0.1ms	0.1ms/0.1ms
Switching Hysteresis	<15%(Sr)	<15%(Sr)
Repeat Accuracy	<1.0%(Sr)	<1.0%(Sr)
Protection Category	IP67	IP67
Operating Temperature	-25°C - +70°C	-25°C - +70°C
Temperature Drift	<10%(Sr)	<10%(Sr)
Short Circuit Protection	YES	YES
Overload Trip Point	220mA	220mA
Material Active Face	POM	POM
DC 3 wire 10-30V NPN N.O.	**P1S1B8802NO3A2M** 1	**P1S1B8802NO3S2M** 1
DC 3 wire 10-30V NPN N.C.	**P1S1B8802NC3A2M** 2	**P1S1B8802NC3S2M** 2
DC 3 wire 10-30V PNP N.O.	**P1S1B8802PO3A2M** 3	**P1S1B8802PO3S2M** 3
DC 3 wire 10-30V PNP N.C.	**P1S1B8802PC3A2M** 4	**P1S1B8802PC3S2M** 4
DC 4 wire 10-30V Changeover PNP (N.O. & N.C.)		
DC 4 wire 10-30V Changeover NPN (N.O. & N.C.)		
DC 2 wire 10-60V N.O.		
DC 2 wire 10-60V N.C.		
DC 3 wire 10-55V NPN N.O.		
DC 3 wire 10-55V NPN N.C.		
DC 3 wire 10-55V PNP N.O.		
DC 3 wire 10-55V PNP N.C.		
DC 3 wire 5-36V NPN N.O.		
DC 3 wire 5-36V NPN N.C.		
DC 3 wire 5-36V PNP N.O.		
DC 3 wire 5-36V PNP N.C.		
DC 4 wire 5-36V Changeover PNP (N.O & N.C.)		
DC 4 wire 5-36V Changeover NPN (N.O & N.C.)		
Dimensions (unit: mm)	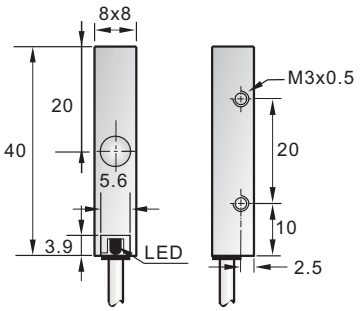	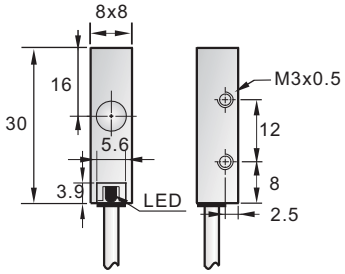
Cable 2M (PVC)	3 ϕ 3x0.15	3 ϕ 3x0.15
Weight	Approx.38 g	Approx.38 g

DC INDUCTIVE PROXIMITY SENSORS

Q8	Q8	Q8
●	●	●
2 mm	3 mm	3 mm
Nickel plated brass	Nickel plated brass	Nickel plated brass
●	●	●
10-30VDC	10-30VDC	10-30VDC
<10%	<10%	<10%
<10mA	<10mA	<10mA
200mA	200mA	200mA
<0.01mA	<0.01mA	<0.01mA
<2.0V	<2.0V	<2.0V
2KHZ	1KHZ	1KHZ
0.1ms/0.1ms	0.2ms/0.2ms	0.2ms/0.2ms
<15%(Sr)	<15%(Sr)	<15%(Sr)
<1.0%(Sr)	<1.0%(Sr)	<1.0%(Sr)
IP67	IP67	IP67
-25°C - +70°C	-25°C - +70°C	-25°C - +70°C
<10%(Sr)	<10%(Sr)	<10%(Sr)
YES	YES	YES
220mA	220mA	220mA
POM	POM	POM
P1S1B8802NOPA3M 25	**P1S1B8803NO3A2** 1	**P1S1B8803NO3S2** 1
P1S1B8802NCPA3M 25	**P1S1B8803NC3A2** 2	**P1S1B8803NC3S2** 2
P1S1B8802POPA3M 26	**P1S1B8803PO3A2** 3	**P1S1B8803PO3S2** 3
P1S1B8802PCPA3M 26	**P1S1B8803PC3A2** 4	**P1S1B8803PC3S2** 4
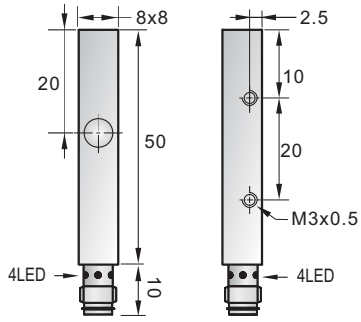	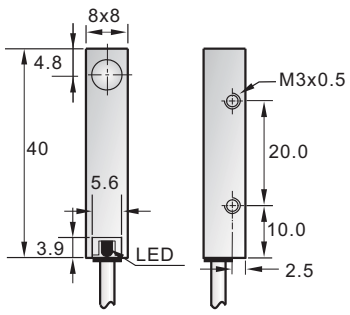	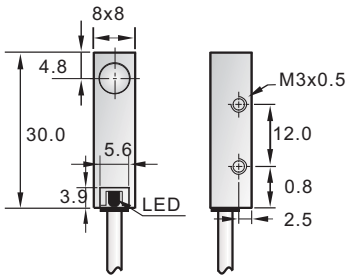
	3 ϕ 3x0.15	3 ϕ 3x0.15
Approx.38 g	Approx.38 g	Approx.38 g

DC INDUCTIVE PROXIMITY SENSORS

Diameter	Q8		Q8	
● Shielded ○ Non-shielded	●		●	
Switching Distance Sn: mm	3 mm		3 mm	
Housing Material	Nickel plated brass		Nickel plated brass	
● With LED ○ Without LED	●		●	
Picture				
Operating Voltage	10-30VDC		10-30VDC	
Ripple	<10%		<10%	
No Load Current	<10mA		<10mA	
Max. Load Current	200mA		200mA	
Leakage Current	<0.01mA		<0.01mA	
Voltage Drop	<2.0V		<2.0V	
Switching Frequency	1KHZ		1KHZ	
Response Time	0.2ms/0.2ms		0.2ms/0.2ms	
Switching Hysteresis	<15%(Sr)		<15%(Sr)	
Repeat Accuracy	<1.0%(Sr)		<1.0%(Sr)	
Protection Category	IP67		IP67	
Operating Temperature	-25°C - +70°C		-25°C - +70°C	
Temperature Drift	<10%(Sr)		<10%(Sr)	
Short Circuit Protection	YES		YES	
Overload Trip Point	220mA		220mA	
Material Active Face	POM		POM	
DC 3 wire 10-30V NPN N.O.	**P1S1B8803NOPA3**	**25**	**P1S1B8803NO3A2M**	**1**
DC 3 wire 10-30V NPN N.C.	**P1S1B8803NCPA3**	**25**	**P1S1B8803NC3A2M**	**2**
DC 3 wire 10-30V PNP N.O.	**P1S1B8803POPA3**	**26**	**P1S1B8803PO3A2M**	**3**
DC 3 wire 10-30V PNP N.C.	**P1S1B8803PCPA3**	**26**	**P1S1B8803PC3A2M**	**4**
DC 4 wire 10-30V Changeover PNP (N.O. & N.C.)				
DC 4 wire 10-30V Changeover NPN (N.O. & N.C.)				
DC 2 wire 10-60V N.O. *				
DC 2 wire 10-60V N.C. *				
DC 3 wire 10-55V NPN N.O.				
DC 3 wire 10-55V NPN N.C.				
DC 3 wire 10-55V PNP N.O.				
DC 3 wire 10-55V PNP N.C.				
DC 3 wire 5-36V NPN N.O.				
DC 3 wire 5-36V NPN N.C.				
DC 3 wire 5-36V PNP N.O.				
DC 3 wire 5-36V PNP N.C.				
DC 4 wire 5-36V Changeover PNP (N.O & N.C.)				
DC 4 wire 5-36V Changeover NPN (N.O & N.C.)				
Dimensions (unit: mm) * : DC 2wire 10-60V specifications see page 3-05. Other is same.	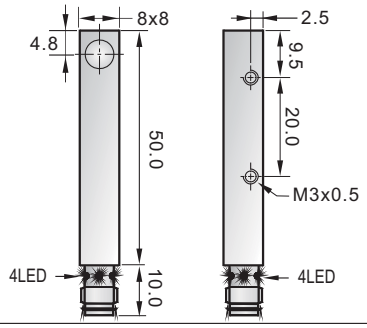		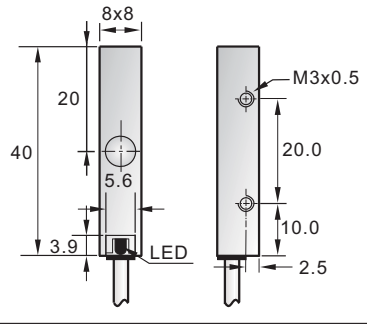	
Cable 2M (PVC)			3 ϕ 3x0.15	
Weight	Approx.38 g		Approx.38 g	

DC INDUCTIVE PROXIMITY SENSORS

Q8	Q8	M12	
●	●	●	○
3 mm	3 mm	2 mm	4 mm
Nickel plated brass	Nickel plated brass	Stainless steel or Nickel plated brass	
●	●	●	

Q8	Q8	M12	
10-30VDC	10-30VDC	10-30VDC / 5-36VDC / 10-55VDC / 10-60VDC	
<10%	<10%	<10%	
<10mA	<10mA	<10mA	
200mA	200mA	200mA	
<0.01mA	<0.01mA	<0.01mA	
<2.0V	<2.0V	<1.5V	
1KHZ	1KHZ	2KHZ	1KHZ
0.2ms/0.2ms	0.2ms/0.2ms	0.1ms/0.1ms	0.2ms/0.2ms
<15%(Sr)	<15%(Sr)	<15%(Sr)	
<1.0%(Sr)	<1.0%(Sr)	<1.0%(Sr)	
IP67	IP67	IP67	
-25°C - +70°C	-25°C - +70°C	-25°C - +70°C	
<10%(Sr)	<10%(Sr)	<10%(Sr)	
YES	YES	YES	
220mA	220mA	220mA	
POM	POM	POM	PBT

P1S1B8803NO3S2M	**1**	**P1S1B8803NOPA3M**	**25**	**P1C1B1202NO3A2**	**1**	**P1C2B1204NO3A2**
P1S1B8803NC3S2M	**2**	**P1S1B8803NCPA3M**	**25**	**P1C1B1202NC3A2**	**2**	**P1C2B1204NC3A2**
P1S1B8803PO3S2M	**3**	**P1S1B8803POPA3M**	**26**	**P1C1B1202PO3A2**	**3**	**P1C2B1204PO3A2**
P1S1B8803PC3S2M	**4**	**P1S1B8803PCPA3M**	**26**	**P1C1B1202PC3A2**	**4**	**P1C2B1204PC3A2**
				P1C1B1202PS4A2	**6**	**P1C2B1204PS4A2**
				P1C1B1202NS4A2	**5**	**P1C2B1204NS4A2**
				P4C1B1202CO2A2	**7**	**P4C2B1204CO2A2**
				P4C1B1202CC2A2	**8**	**P4C2B1204CC2A2**
				P3C1B1202NO3A2	**1**	**P3C2B1204NO3A2**
				P3C1B1202NC3A2	**2**	**P3C2B1204NC3A2**
				P3C1B1202PO3A2	**3**	**P3C2B1204PO3A2**
				P3C1B1202PC3A2	**4**	**P3C2B1204PC3A2**
				P2C1B1202NO3A2	**1**	**P2C2B1204NO3A2**
				P2C1B1202NC3A2	**2**	**P2C2B1204NC3A2**
				P2C1B1202PO3A2	**3**	**P2C2B1204PO3A2**
				P2C1B1202PC3A2	**4**	**P2C2B1204PC3A2**
				P2C1B1202PS4A2	**6**	**P2C2B1204PS4A2**
				P2C1B1202NS4A2	**5**	**P2C2B1204NS4A2**

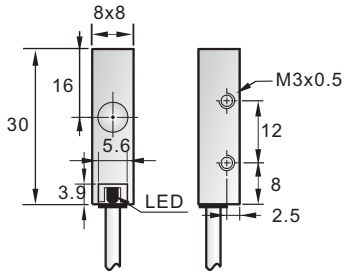

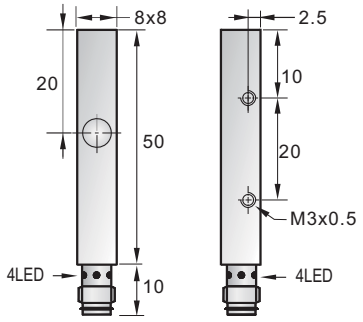

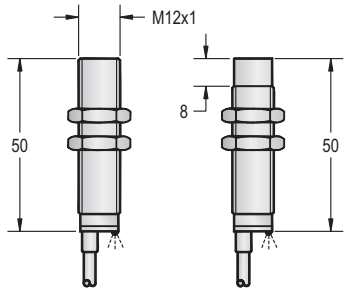

Q8	Q8	M12	
3 ϕ 3x0.15		4 ϕ 3x0.15 or 4 ϕ 4x0.15	
Approx.38 g	Approx.38 g	Approx.67 g	Approx.65 g